PH-A14 Measuring Projector

Series 172 - Accessories/Dimensions

Standard accessories

No.	Description
172-011	Lens 10X for Profile Projector PH-A14
512305	Halogen bulb (24V, 150W)

Optional accessories

No.	Description
174-173D	KA-Counter 2 Axis
58AAA407	Tray for KA counter
264-146D	QM-Data 200 Arm mount type
172-013	Lens 50X for Profile Projector PH-A14
172-012	Lens 20X for Profile Projector PH-A14
172-014	Lens 100X for Profile Projector PH-A14
172-116	Standard scale 50 mm
172-118	Reading scale 200 mm
172-286	Green filter
172-143	Centre support riser
172-144	Rotary vice (Max. workpiece ø60 mm)
172-234	V-block with clamp (Max. workpiece ø50 mm)
172-132	Vertical holder
172-161	Reading scale 300 mm
172-001	Support for straight gear
172-002	Support for flat gear
172-142	Centre support
011534	Cleaner for optics
332-151	Optoeye-200
12AAE671	Detector mounting plate for ø250 to ø350 mm

Optional accessories for Inch

No.	Description
172-117	Standard scale (2")
172-119	Reading scale (8")
172-162	Reading scale (12")
174-173E	KA-Counter 2 axis UK only
264-146E	QM-Data 200 Arm mount type UK only

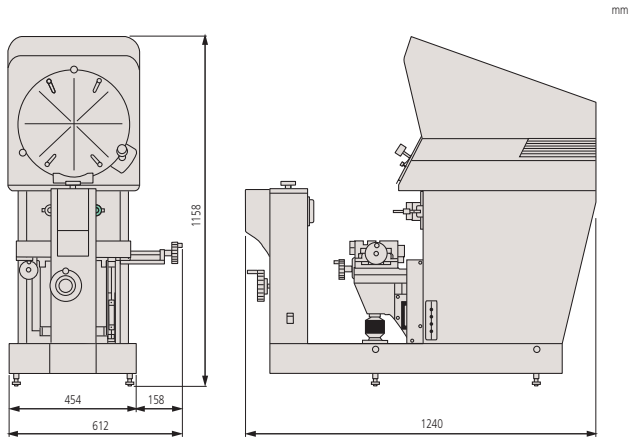
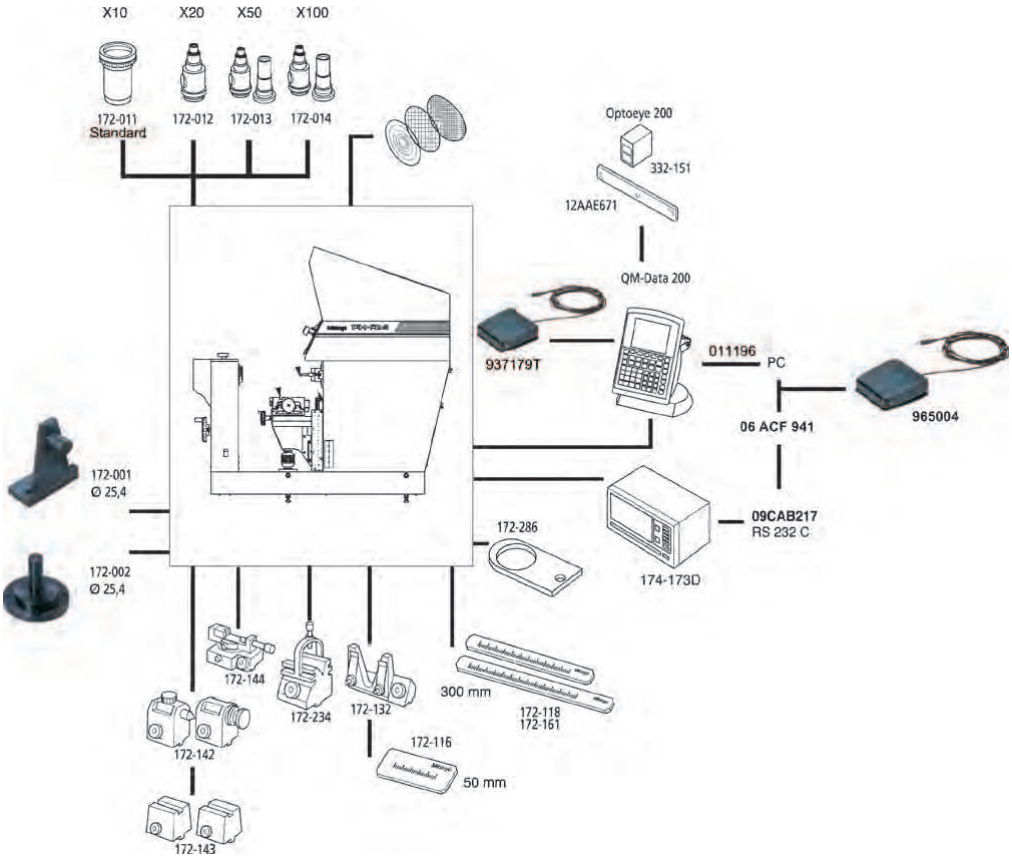
Model	PH-A14
No.	172-810-11D 172-810-11E
Remarks	172-810-11E UK only
XY stage travel range (mm)	203 x 102
Measurement method	Linear encoder
XY stage table top size (mm)	407 x 153
Max stage loading	45 kg