SERIES 527 – Dial Fine Adjustment Depth Gauge

- Easy-to-read dial caliper with rack and pinion magnification mechanism.
- Optional longer extension bases are available.

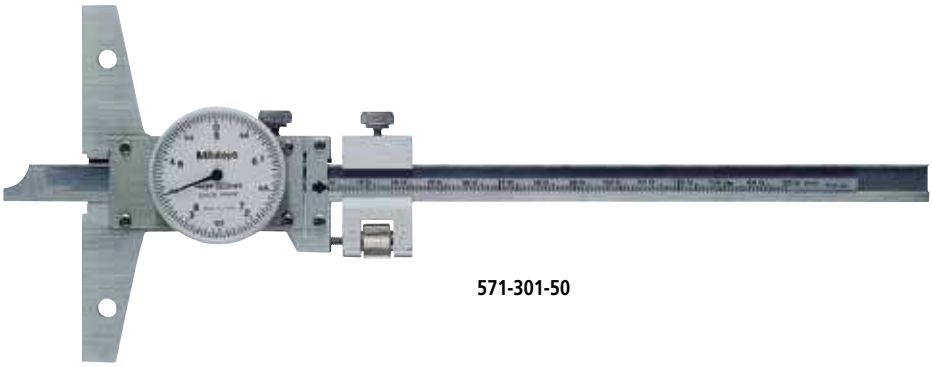

571-301-50

D

SPECIFICATIONS

Metric

Code No.	Range	Dial reading	Accuracy	Price
527-301-50	0 - 150 mm	0.05 mm	±0.05 mm	**£128.00**

Inch

Code No.	Range	Dial reading	Accuracy	Price
527-311-50	0 - 6"	.001"	±.001"	**£128.00**
527-312-50	0 - 8"			**£210.00**
527-313-50	0 - 12"		±.0015"	**£240.00**

DIMENSIONS

Unit: mm

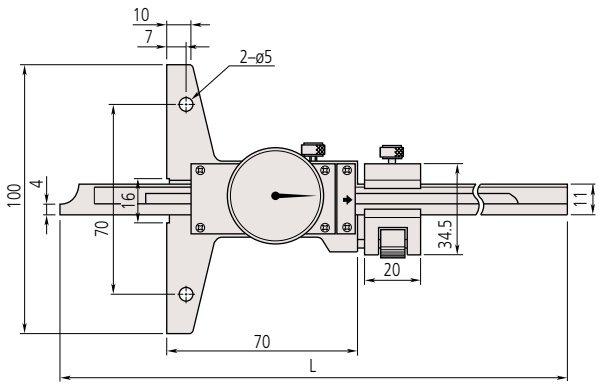

Range	L	Base (W x T)
0 - 6"	260	100 x 6.5
0 - 8"	310	
0 - 12"	410	

Mitutoyo operates a policy of continuous improvement that aims to provide the customer with the benefit of the latest technological advances.
Therefore the company reserves the right to change any or all aspects of any product specification without notice.