SERIES 547 – ABSOLUTE Digimatic Depth Gauge

- Easy-to-read dial effectively prevents misreading.
- Allows integration into statistical process control and measurement systems for models with measurement data output connector.

ABSOLUTE

547-217S

547-218S

Technical Data

Stroke:	12.7 mm/.5"
Measuring force:	1.5N
Base flatness:	5 µm/.0002" (2 µm/.00008": **543-392B**)
Base thickness:	16 mm/.63"
Contact point:	Carbide-tipped ball point
Max. response speed:	Unlimited
Battery:	SR44 (1 pc.), **938882**
Battery life:	Approx. 7000 hours under normal use

Optional Accessories

905338: SPC data cable (1 m)
£32.90

905409: SPC data cable (2 m)
£36.80

02AZD790F: SPC data cable for U-WAVE-T (160 mm)
£52.20

SPECIFICATIONS

Metric

Code No.	Range	Graduation	Accuracy*1	Extension rod	Indicator	Price
547-217S	0-200 mm/ 0-8"	0.01 mm/.0005"	±20 µm/±.001"	4 pcs. (.5", 1", 2", 4")	**543-402B***2	**£287.00**
547-218S						**£292.00**
547-258S		0.001 mm/.00005"	±5 µm/±.0002"		**543-392B**	**£351.00**

*1 Excluding quantizing error
*2 The measuring force of this indicator is different from that of the standard 543-402B

DIMENSIONS

Unit: mm

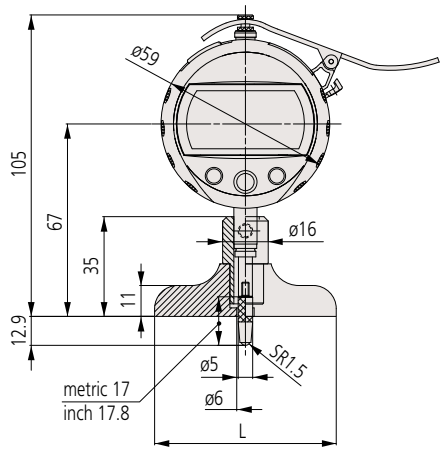

Code No.	L	Base thickness
547-217S	2.5"	.63"
547-218S	4"	
547-258S		

Caution should be used when exchanging the contact point of a depth gauge

The measurement range may not be maintained when mounting a differently sized contact point than the standard accessory. Zero-setting will not be possible if the contact-point diameter is too large for the plunger hole in the bottom face of the base. Parallelism adjustment with the bottom face of the base is required when mounting a flat contact point such as the flat/needle or carbide-tipped contact point.

D

Mitutoyo operates a policy of continuous improvement that aims to provide the customer with the benefit of the latest technological advances.
Therefore the company reserves the right to change any or all aspects of any product specification without notice.