Optional Accessories

21EAA194: SPC data cable (1 m)
£40.00

21EAA190: SPC data cable (2 m)
£45.00

02AZD790G: SPC data cable for U-WAVE-T (160 mm)
£52.20

02AZE140G: SPC data cable for U-WAVE-T and footswitch (160/500 mm)
£107.00

21EAA210: Bifurcated connecting cable with zero-setting terminal (1 m)*
£102.00

21EAA211: Bifurcated connecting cable with zero-setting terminal (2 m)*
£115.00

21EZA146: Lug
£10.10

21EZA150: Lifting knob (ID-N only)
£10.90

02ACA376: Rubber boot for ID-N, NBR
£2.80

125317: Rubber boot for ID-B, NBR
£3.80

238774: Rubber boot for ID-N, silicone
£11.90

21EAA212: Rubber boot for ID-B, silicone
£5.80

Contact points for Mitutoyo's dial indicators (refer to pages F-37 to F-40 for details)

* Two of the wires inside the cable are separated for zero setting without touching the SET switch on the main body. Use these cables in combination with commercially available switches. Zero setting is performed by briefly connecting these two wires together (less than a second), and ABS preset & recall by connecting for a second or more.

Plunger can be manually lifted. Remove the plunger cap for ID-N and attach the lifting knob to the plunger. Note that water resistance is not maintained in this configuration.

DIMENSIONS

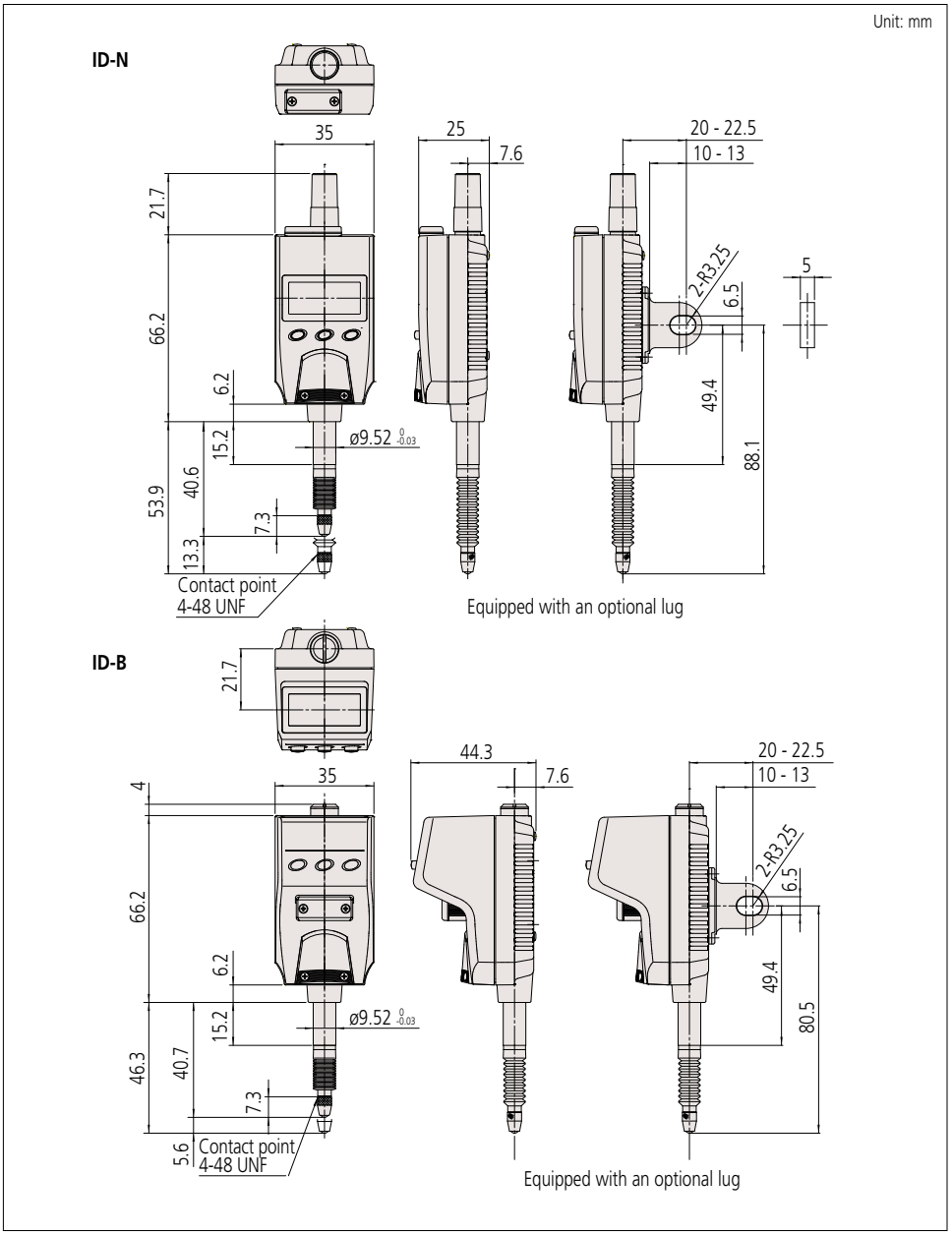

Sample applications

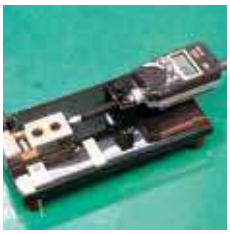

F