FEATURES

Metric

Code No.			
1929S	✔	—	—
2929S	✔	—	—
2929S-62	✔	✔	—
2900S-10	✔	—	✔
2900S-72	✔	✔	✔
2901S-10	✔	—	✔
2971	✔	✔	—
2972	✔	✔	—

Inch

Code No.			
2910S-10	✔	—	✔
2978	✔	✔	—
2976	✔	✔	—

DIMENSIONS

Unit: mm

1929S

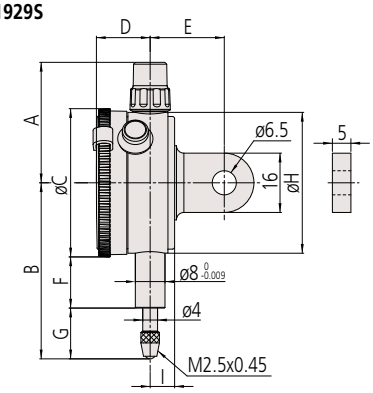

Note 1: Dimensions of the inch (ANSI/AGD Type) dial indicator partly differ from those of the metric (ISO/JIS Type) indicator.
Note 2: Inch (ANSI/AGD Type) dial indicator is provided with a stem of 3/8" dia. and #4-48UNF thread mount for the contact point.

ANSI/AGD Type

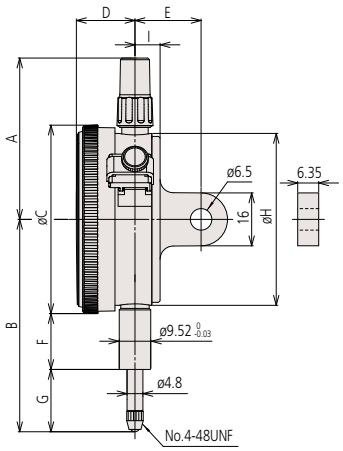

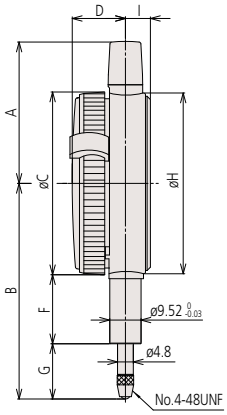

ISO/JIS Type

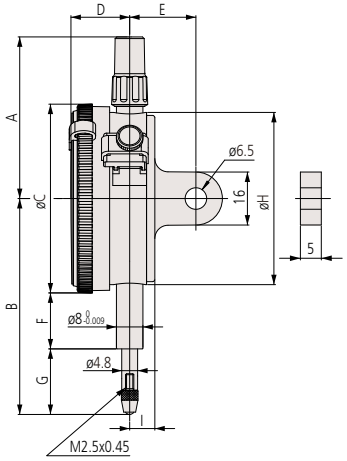

Code No.	A	B	C	D	E	F	G	H	I
ISO/JIS type									
1929S	32.5	47.5	40	14.5	20	13.8	13.7	38	6.6
2929S	48.8	65.2	57	17.7		16.9	19.8	52	7.6
2929S-62									
2900S-10		66					20.6		
2900S-72									
2901S-10		66.1					20.7		
2971*	43.2	65.6	55.6	16.2	—	21	16.8	55	
2972*		66					17.2		
ANSI/AGD type									
2910S-10	48.8	51.2	57	17.7	19	13.6	9.1	52	7.6
2978*	43.2	65.3	55.6	16.2	—	21	16.5	55	
2976*		64.7					15.9		

* Plain back

F

Mitutoyo operates a policy of continuous improvement that aims to provide the customer with the benefit of the latest technological advances.
Therefore the company reserves the right to change any or all aspects of any product specification without notice.

mitutoyo@mitutoyo-tools.ru www.mitutoyo-tools.ru