# Dial Test Indicators

## SERIES 513 – Universal Dial Test Indicator

- Universal application to all directions. (Not only the direction of the contact point, but also the direction of measurement itself can be adjusted 360 degrees without moving the indicator.)

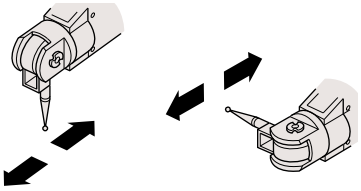

513-304GT

## FEATURES

| Metric | |
|---|---|
| Code No. | |
| 513-304GT | ✔ |
| **Inch** | |
| Code No. | |
| 513-302GT | ✔ |

## Optional Accessories

**102824**: Stylus, ø1 mm ball contact (carbide) **£4.20**

**102825**: Stylus, ø2 mm ball contact (carbide) **£7.20**

**102826**: Stylus, ø3 mm ball contact (carbide) **£4.20**

Swivel clamps, holding bars, stems and styli (refer to pages F-52 to F-54 for details)

## SPECIFICATIONS

**Metric**

| Code No. | Graduation | Range | Accuracy | Scale | Measuring force | Price |
|---|---|---|---|---|---|---|
| 513-304GT | 0.01 mm | 0.8 mm | 8 µm | 0-40-0 | 0.3N or less | £301.00 |

**Inch**

| Code No. | Graduation | Range | Accuracy | Scale | Measuring force | Price |
|---|---|---|---|---|---|---|
| 513-302GT | .0005" | .03" | ±.0005" | 0-15-0 | 0.3N or less | £301.00 |

## DIMENSIONS

Unit: mm

513-304GT

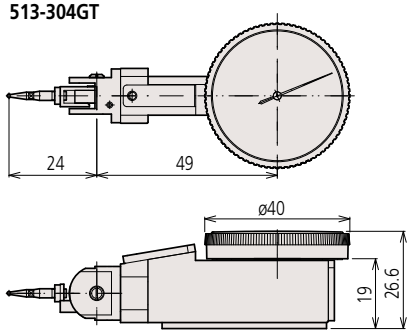


## Set Configuration: Metric

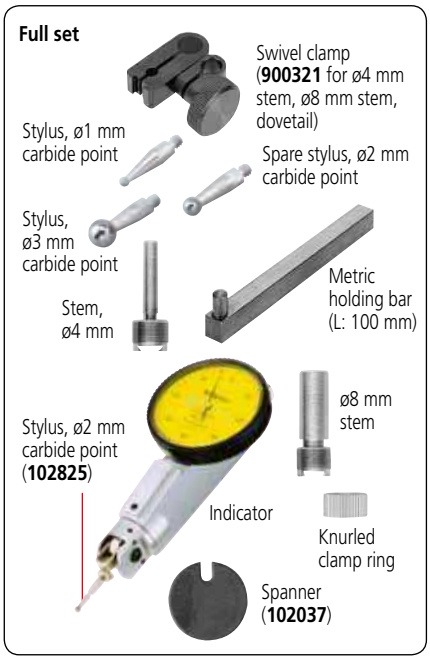


## Set Configuration: Inch

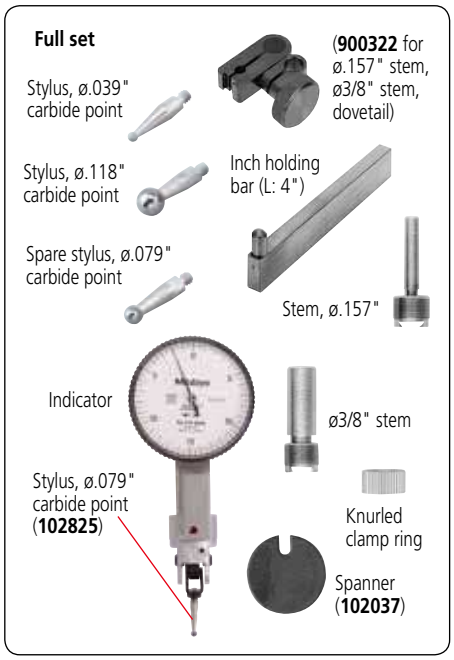




Mitutoyo operates a policy of continuous improvement that aims to provide the customer with the benefit of the latest technological advances. Therefore the company reserves the right to change any or all aspects of any product specification without notice.
mitutoyo@mitutoyo-tools.ru www.mitutoyo-tools.ru