Laser Scan Micrometers

SERIES 544 – LSM-6200 Standard Display Unit for Laser Scan Micrometer

- Setup values can be continuously monitored with this dual-display design. Simultaneous display of two measurement values is also possible.
- Either the segment measurement (7 segments maximum) or edge measurement (1 to 255 edges) can be selected.
- Includes RS-232C and I/O and analogue interface capabilities.
- Includes statistical calculation and abnormal data elimination functions.

544-072E

G

SPECIFICATIONS

Code No.	544-072E
Price	£2040.00

DIMENSIONS

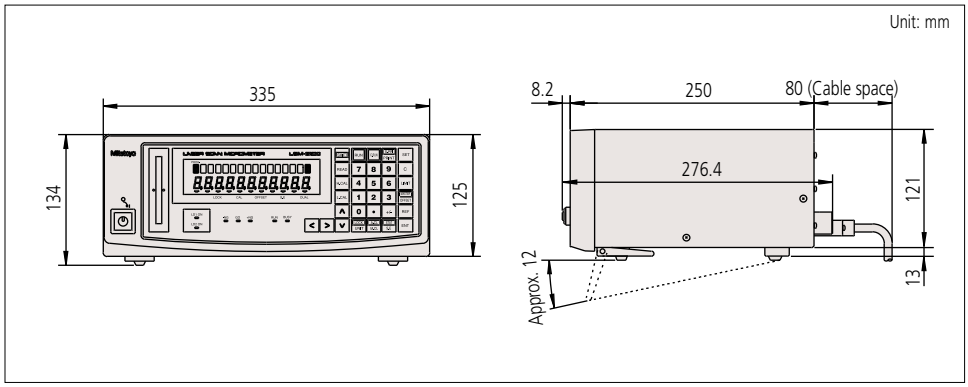

Technical Data

Main display:	16-digit fluorescent tube
Interface units equipped:	RS-232C, Analogue, I/O, Footswitch
Power supply:	100 - 240V AC±10%, 40VA, 50/60Hz

Functions

Zero-setting, preset, GO/±NG judgement, multi-limit judgement, offset value setting, sample measurement, statistical calculation, group judgement, data output, workpiece position display, mm/inch switching, dual-gauge calibration, transparent object measurement, dual-unit measurement (optional), automatic measurement, abnormal data elimination.

QUICKTOOL

QUICKTOOL is a free software tool that makes LSM-5200 key-operated settings simple and easy. Please contact your local Mitutoyo office for details. Note that QUICKTOOL for LSM-6200 and QUICKTOOL for LSM-5200 are incompatible.

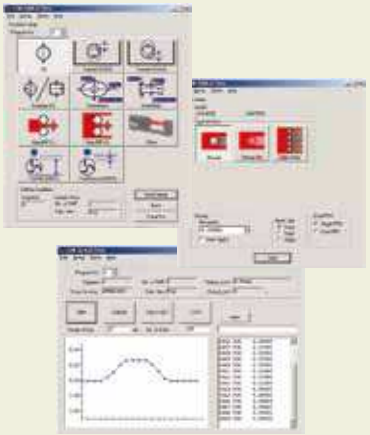

Mitutoyo operates a policy of continuous improvement that aims to provide the customer with the benefit of the latest technological advances. Therefore the company reserves the right to change any or all aspects of any product specification without notice.
mitutoyo@mitutoyo-tools.ru www.mitutoyo-tools.ru