Optional Accessories

375-054: 0.5X camera adapter (with C-mount adapter)
£1230.00

970441: C-mount adapter
£45.10

12BAB345: Halogen bulb (long life type, 24V, 50W)
£19.00

517181: Halogen bulb (24V, 100W)
£50.20

12BAD602: High intensity halogen bulb (24V, 100W)
£POA

176-308: Vibration damping stand
£2270.00

176-309: Mounting stand
£795.00

375-056: Stage micrometer
£228.00

12AAA165: Lens cleaning kit
£40.00

12AAA846: Footswitch
£60.00

Illumination units

176-315E: Halogen illumination unit (12V, 100W)
£723.00

176-316D: Halogen illumination unit (12V, 100W)
£1440.00

176-343D: Twin fibre-optics illuminator
£1030.00

12AAG806: GIF colour filter (for **176-315**)
£135.00

12AAG807: LB80 colour filter (for **176-316**)
£120.00

Fixture and Stage accessories

176-107: Holder with clamp*
£148.00

172-378: V-block with clamp* (max. workpiece dia.: 25 mm)
£194.00

172-197: Swivel centre support* (max. workpiece dia.: 80 mm)
£348.00

176-305: Rotary stage with fine feed knob for 505C/1010C/2010C models
£1205.00

176-306: Rotary stage with fine feed knob for 2017C/3017C models
£1565.00

* Fixture mount adapter (**176-310**) is required for 2010B models.
Fixture mount adapter (**176-304**) is required for 2017B/3017B/4020B models.

SPECIFICATIONS

Model (XY stage size)		**1010C**	**2010C**	**2017C**	**3017C**
Code No.	**MF-UA**	**176-668-10**	**176-669-10**	**176-670-10**	**176-671-10**
	MF-UB	**176-688-10**	**176-689-10**	**176-690-10**	**176-691-10**
	MF-UC	**176-674-10**	**176-675-10**	**176-676-10**	**176-677-10**
	MF-UD	**176-694-10**	**176-695-10**	**176-696-10**	**176-697-10**
XY stage travel range		100 x 100 mm	200 x 100 mm	200 x 170 mm	300 x 170 mm
Z-axis travel range		150 mm		220 mm	
Focusing method		Manual focussing (coarse focussing: 10 mm/rev., fine focussing: 0.1 mm/rev.)			
Measurement method		Linear encoder (2-axis model: X / Y-axis, 3-axis model: X / Y / Z-axis)			
Resolution (switchable)		0.001 mm / 0.0005 mm / 0.0001 mm / .0001" / .00005" / .00001"			
Measuring accuracy (at 20°C)		XY-axis: (2.2+0.02L) µm, L = measuring length (mm) when not loaded, JIS B 7153			
Indication accuracy (at 20°C)		Z-axis: (5+0.04L) µm, L = measuring length (mm)			
Floating function		X and Y axes with quick-release mechanism			
XY stage top size		280 x 280 mm	350 x 280 mm	410 x 342 mm	510 x 342 mm
Effective glass size		180 x 180 mm	250 x 150 mm	270 x 240 mm	370 x 240 mm
Swivel function		—		±5° (left)	
Max. stage loading		10 kg		20 kg	
Max. workpiece height		150 mm		220 mm	
Price		**£POA**	**£POA**	**£POA**	**£POA**

Selection of machine type

Machine type	**MF-UA**	**MF-UB**	**MF-UC**	**MF-UD**
Measurement system	Bright field (BF)		Bright / Dark field (BF/DF)	
Measurement system	2 axis	3 axis	2 axis	3 axis

Illumination Unit

Applicable Illumination Unit	LED	Halogen
Code No.	**176-346E**	**176-348E**

Note: Because the MF-UA/B/C/D models are not supplied with an illumination unit as standard, it is necessary to purchase either an LED or a Halogen illumination unit in addition to the basic instrument.

DIMENSIONS

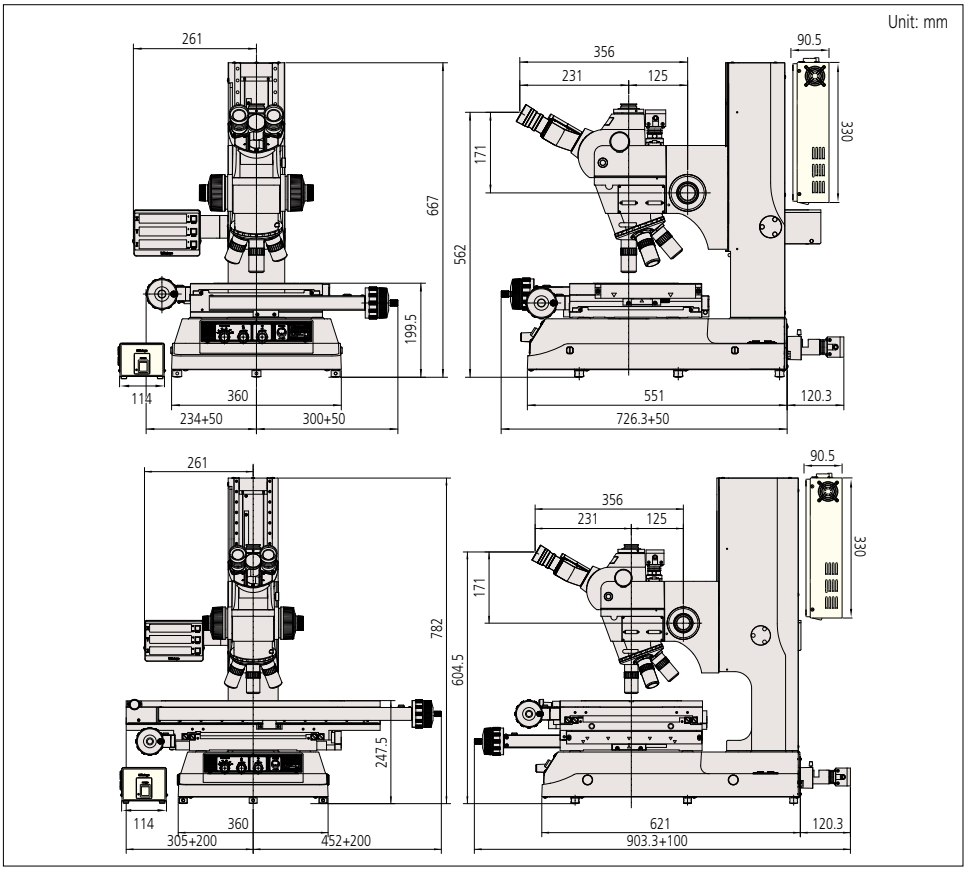

J