Micrometers

SERIES 340, 104 – Interchangeable Anvil Micrometer

DIMENSIONS

Unit: mm

104-135A

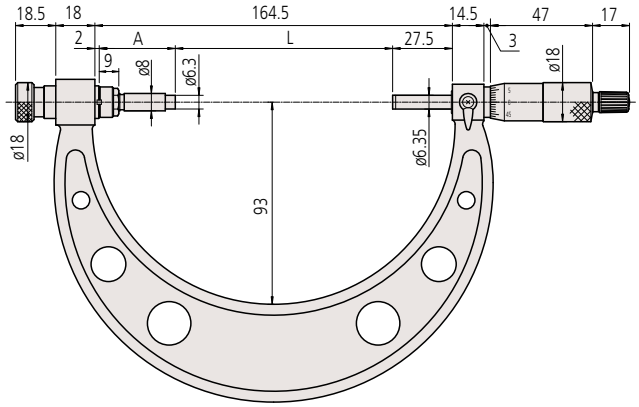

Models from 400 to 1000 mm measuring range

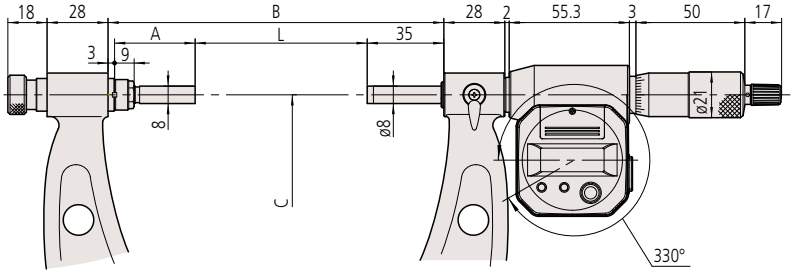

Interchangeable anvils

		L : Range (mm)					
Range	0 to 150 mm models	0 - 25	25 - 50	50 - 75	75 - 100	100 - 125	125 - 150
	150 to 300 mm models	150 - 175	175 - 200	200 - 225	225 - 250	250 - 275	275 - 300
	Code No.	**303950**	**303951**	**303952**	**303953**	**303954**	**303955**
	A: Overall length (mm)	135	110	85	60	35	10
	Interchangeable anvil	M1	M2	M3	M4	M5	M6

		L : Range (mm)				B	C
Range	300 to 400 mm models	300 - 325	325 - 350	350 - 375	375 - 400	425	224
	400 to 500 mm models	400 - 425	425 - 450	450 - 475	475 - 500	525	273
	500 to 600 mm models	500 - 525	525 - 550	550 - 575	575 - 600	625	332
	600 to 700 mm models	600 - 625	625 - 650	650 - 675	675 - 700	725	382
	700 to 800 mm models	700 - 725	725 - 750	750 - 775	775 - 800	825	430
	800 to 900 mm models	800 - 825	825 - 850	850 - 875	875 - 900	925	480
	900 to 1000 mm models	900 - 925	925 - 950	950 - 975	975 - 1000	1025	530
	Code No.	**304001**	**304002**	**304003**	**304004**		
	A: Overall length (mm)	87	62	37	12		
	Interchangeable anvil	M3	M4	M5	M6		

Mitutoyo operates a policy of continuous improvement that aims to provide the customer with the benefit of the latest technological advances.
Therefore the company reserves the right to change any or all aspects of any product specification without notice.
mitutoyo@mitutoyo-tools.ru www.mitutoyo-tools.ru